Control Valves

Definition & Range of Valves

by KSB, BOMBAS E VÁLVULAS, S.A.

> Our technology. Your success.
Pumps • Valves • Service

KSB, Bombas e Válvulas. Contact us.

+351 210 112 300

www.ksb.pt

linkedin.com/in/ksbportugal

Rua Carlos Lopes - Parque Emp. Albiz, D1 - 2635-206 Rio de Mouro

Paulo Costa
Resp. Depto. Indústria & Energia
paulo.costa@ksb.com

Renan Valle
Depto. Indústria & Energia
renan.valle@ksb.com

KSB Group. Experience since 1871.

KSB develops, produces and sells efficient solutions worldwide for reliable and cost effective handling of fluids. Rooted in Germany and established across the globe with subsidiary production and sales companies, KSB focuses on providing top quality, technically outstanding, engineering solutions and services to meet the personalized needs of their clients. Today, KSB is not just a technology leader in fluid dynamics but a total solution provider with about 16300 employees worldwide and has turnover of more than 2 bilion Euro with an active presence in more than 100 countries.

With their immense network, KSB enables all subsidiary companies to draw upon technology, manpower and R&D resources to maintain the highest standards of excellence. And in here, listening to our customers is a culture. Comprehensive consultation is crucial at every stage with customers and our mission is to provide it all: research, innovation, development, consultancy, implementation and service. Performance from the very start that would help us arrive at satisfactory solutions. That's the KSB yardstick. And the promise KSB gives to its customers.

To power. To solve.

We do not just make control valves. We engineer solutions through our customized application engineering tool - SOLUTIONEERING.

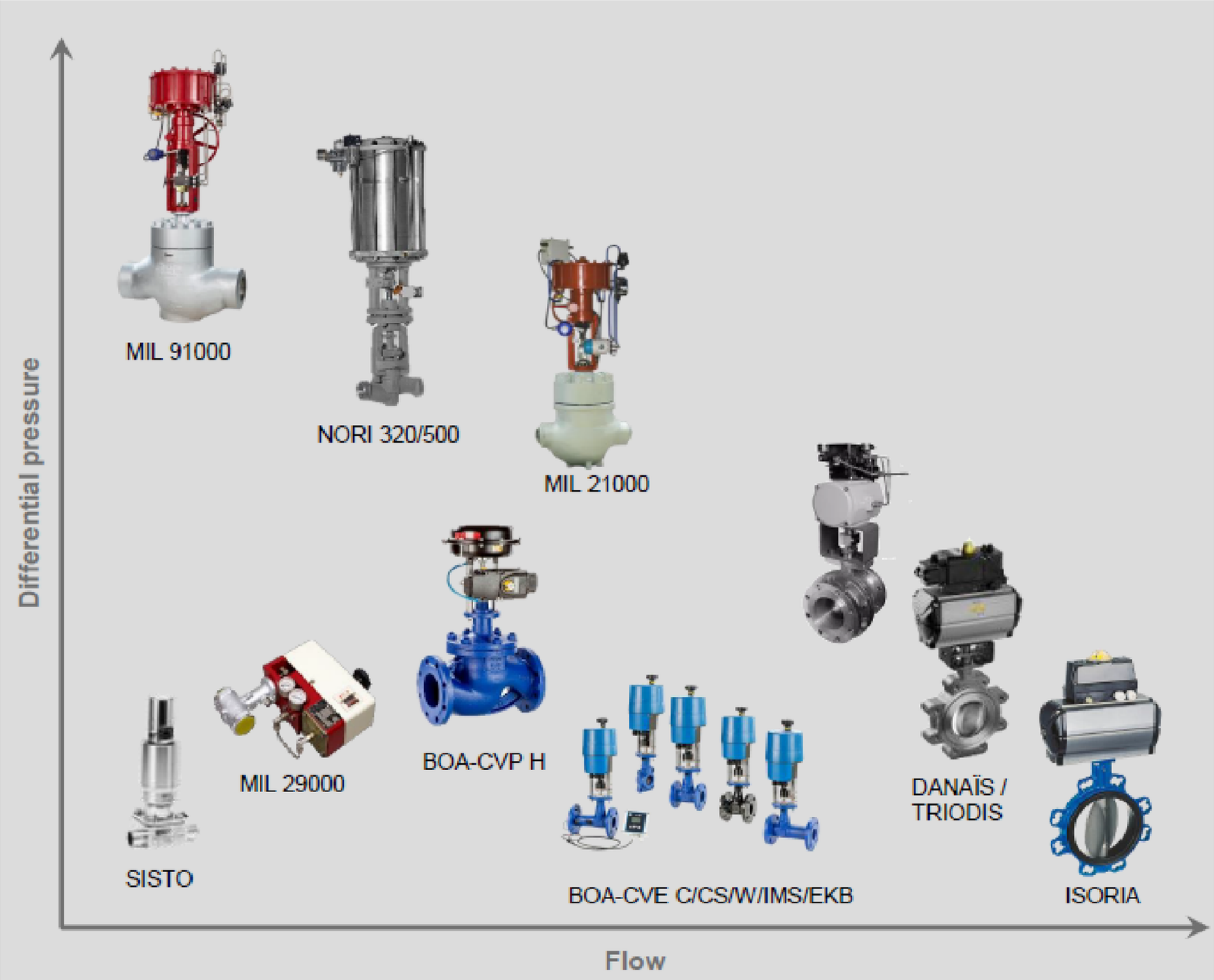

We provide tailor-made solutions for all industry verticals.

Definitions. What is a control valve?

Consists of a valve connected to an actuator mechanism that is capable of changing the position of a flow controlling element in the valve in response to a signal from the controlling system.

The control valve **manipulates a flowing fluid**, such as gas, steam, water, etc., to compensate for the load disturbance and keep the regulated process variable as close as possible to the desired set point.

The control valve assembly typically consists of: valve **body**,
internal **trim** parts, **actuator** to operate the valve, and **accessories** (positioners, pressure regulators, manual operators, limit switches, etc.)

Definitions. What contains a control valve?

- Contains a valve (e.g. globe valve, ball valve, butterfly valve, etc.)
- Contains an actuator (pneumatic, electric, hydraulic)
- Contains a positioner
- Cointains a charateristic (linear, equal %, quick opening)

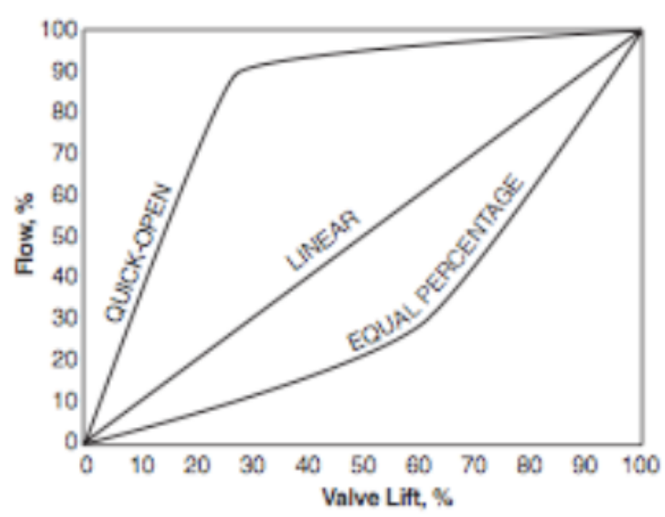

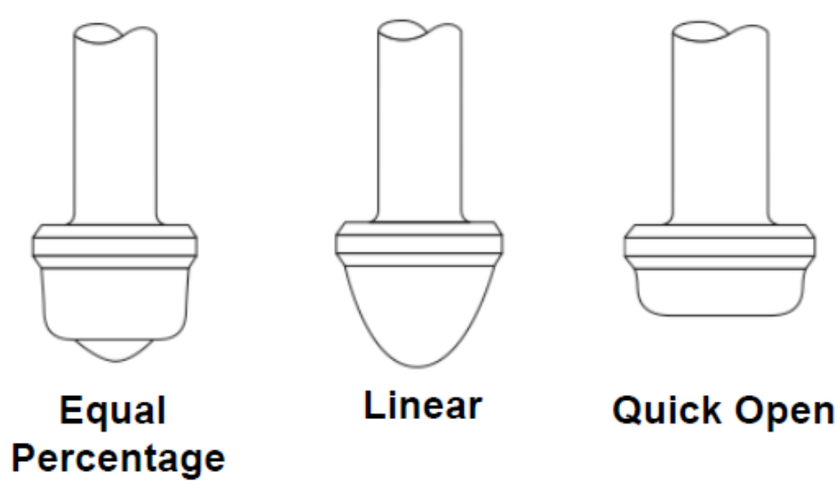

Definitions. Control valve Classification.

In addition to **linear** and **rotary**, control valves are also classified according to their **guiding methods**, characterization methods and the nature of **services** they are applied within

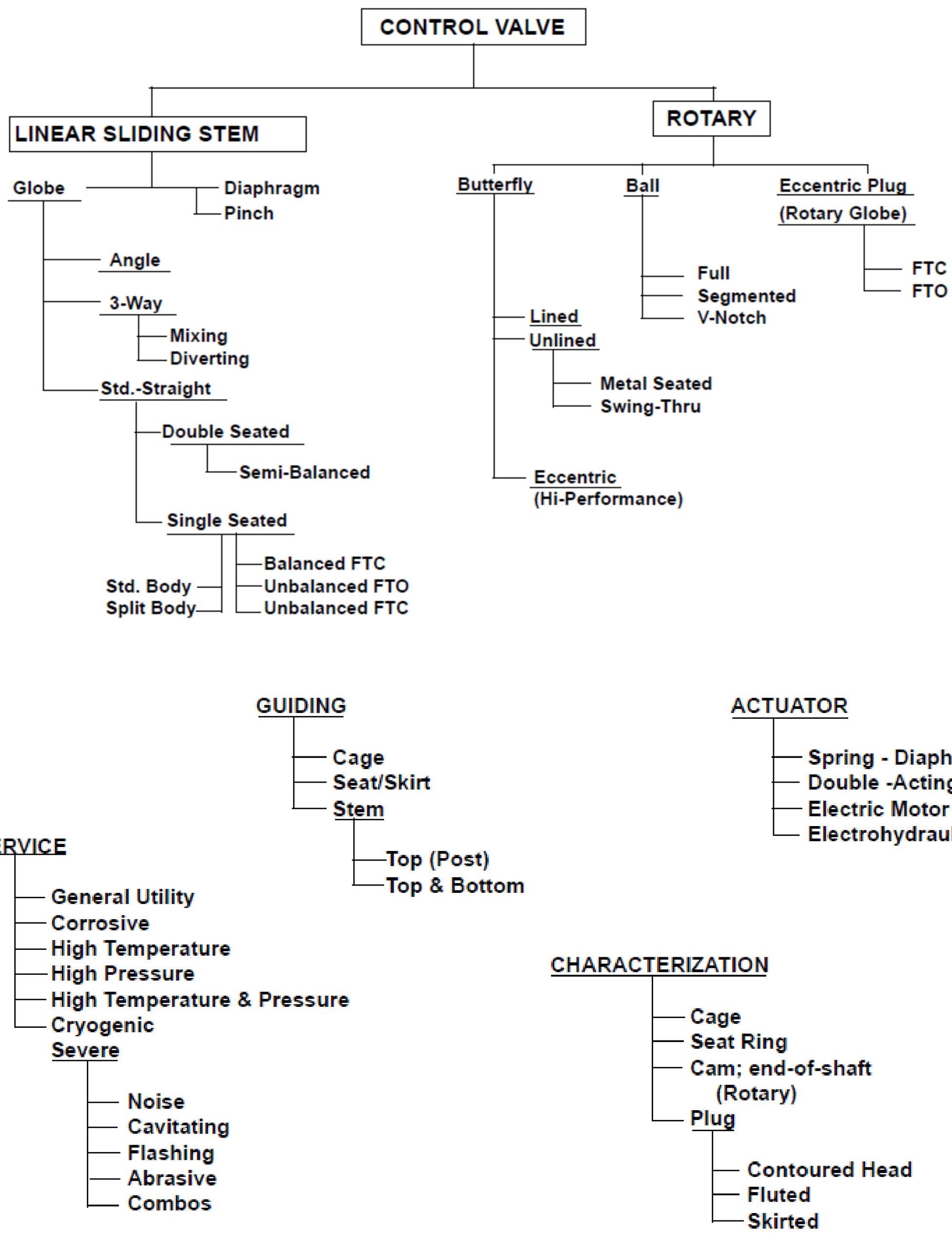

FTC - Flow To Close

FTO - Flow To Open

Definitions. Factors determining selection of valves

Their operation parameters vary widely in terms of pressure, pressure drops, flow rates and temperature.

In addition, other crucial factors like noise, cavitation, wire drawing, leakage class and flashing also play an important part in the selection of control valves.

Selection of a control valve body assembly requires particular consideration to provide the best available combination of valve body
style, material, and trim construction design for the intended service.

Because there are frequently several possible correct choices for an application, it is important that all the following information be provided:

- Type of fluid to be controlled
- Temperature of fluid
- Viscosity of fluid
- Specific gravity of fluid
- Flow capacity required (maximum and minimum)
- Inlet pressure at valve (maximum and minimum)
- Outlet pressure (maximum and minimum)
- Pressure drop during normal flowing conditions
- Pressure drop at shutoff
- Maximum permissible noise level, if pertinent, and the measurement reference point
- Flow action (flow tends to open valve or flow tends to close valve)
- Inlet and outlet pipeline size and schedule
- Special tagging information required
- Body Material
- Trim and Packing Material
- End connections and valve rating
- Action desired on air failure (valve to open, close, or retain last controlled position)
- Instrument air supply available
- Instrument signal
- Valve body construction (angle, double-port, butterfly, etc.)
- Valve plug action (push-down-to-close or push-down-to-open)
- Valve plug guiding (cage-style, port-guided, etc.)

Specification sheet for RFQ. Valve with Pneumatic Actuator

Customer information:

Company: ☐

Field of application: ☐

Date: ☐ (dd.mm.yyyy)

Technical information:

Nominal size (pipe/globe valve): DN ☐

Nominal pressure: PN ☐

Upstream pressure: p1 ☐ [bar(a)]

Downstream pressure: p2 ☐ [bar(a)]

Volume flow rate: Q ☐ [m³/h]

Fluid handled: ☐

Fluid temperature: T ☐ [°C]

Valve characteristic: Linear ☐ Equal-percentage ☐

Differential pressure for actuator selection ☐ [bar]

Leakage class: IV ☐ VI ☐

Rangeability required:

Variant / Accessories:

Function: Spring to open (NO) ☐ Spring to close (NC) ☐

Control pressure: ☐ [bar]

Electro-pneumatic positioner ☐ Sipart PS2 2-wire 4-20 mA

Additional modules integrated in the unit ☐ IY module for actual-position feedback, 4-20 mA

☐ Alarm module for 3 alarm outputs and 1 binary input

Supplementary equipment: ☐ Pressure gauge block (with two pressure gauges)

☐ Filter/reducing station

☐ 3/2-way solenoid valve 230 V

☐ 3/2-way solenoid valve 24 V

☐ Mechanical limit switch, 1 off

☐ Mechanical limit switch, 2 off

☐ Inductive limit switch, 1 off

☐ Inductive limit switch, 2 off

For further information required for completing this specification sheet please refer to the relevant type series booklet.

Specification sheet for RFQ. Valve with Electric Actuator

Customer information:

Company:	
Field of application:	
Date:	(dd.mm.yyyy)

Technical information:

Nominal size (pipe/globe valve):	DN				
Nominal pressure:	PN				
Upstream pressure:	p1		[bar(a)]		
Downstream pressure:	p2		[bar(a)]		
Volume flow rate:	Q		[m³/h]		
Fluid handled:					
Fluid temperature:	T		[°C]		
Valve characteristic:	Linear	☐		Equal-percentage	☐
Actuator function:	3-point	☐		Continuous-action	☐
Supply voltage:	24V	☐		230V	☐
Actuation time (open-close):	t		[s]		
Position setpoint:					
Actual-position feedback value:					
Differential pressure for actuator selection			[bar]		
Leakage class:	IV	☐		VI	☐
Rangeability required:					
Variant / Accessories:					

For further information required for completing this specification sheet please refer to the relevant type series booklet.

Product portfolio. Control valve.

BOA-CVE H

Overview:
Service-friendly control valve to DIN/EN with flanged ends, either with linear or equal-percentage control characteristic at Kvs values of 0.1 to 630 m³/h and closing pressures of up to 40 bar; all internal parts are easy to replace without special tools, including the reversible seat; noise level reduced by standard two-stage pressure reduction combining a parabolic plug and multi-hole cage; with electric actuator.

Technical Specifications:
PN 16/25/40
DN 15 - 200
T (°C) -10 to +450

Applications
General industrial facilities, process engineering, plant engineering, cooling circuits, heating systems.

BOA-CVP H

Overview:
Service-friendly control valve to DIN/EN with flanged ends, either with linear or equal-percentage control characteristic at Kvs values of 0.1 to 630 m³/h and closing pressures of up to 40 bar; all internal parts are easy to replace without special tools, including the reversible seat; noise level reduced by standard two-stage pressure reduction combining a parabolic plug and multi-hole cage; with pneumatic actuator.

Technical Specifications:
PN 16/25/40
DN 15 - 150
T (°C) -10 to +450

Applications
General industrial facilities, process engineering, plant engineering, cooling circuits, heating systems.

Product portfolio. Control valve.

MIL 21000

Overview:
MIL 21000 series single ported, heavy top guided control valves are designed with built-in versatility making them the most widely used control valve, well-suited to handlea wide variety of process applications.
Optional low noise plug for noise or cavitation attenuation; Cryogenic applications and; Angle body (MIL 70000)

Technical Specifications:
ASME 150# to 2500#
DN 1/2" to 10"
Seat leakage class (as per ANSI/FCI 70.2):
Class IV (standard), V & VI (optional)

Applications
MIL 21000 heavy duty top guided control valves are designed to handle fluid like air, water, steam, gas, oil and other fluids having wide flow range requiements. It can be used for moderate pressure drops allowing small particles. Also MIL 21000 series valves arethe best suitable one to handle viscous fluids in refineries and petrochemicals

MIL 41000

Overview:
Hallmarks of exceptional service requirements of control valves are four fold: high pressure drop capability, high capacity, tight shut-off and high temperature capability. MIL 41000 series exhibits these characteristics in all valve sizes. The rugged cage guiding, optional pressure balancing and a host of custom-engineered trim designs make these valves suitable for higher pressure drops and other severe applications.

Technical Specifications:
ASME 150# to 4500#
DN 1/2" to 36"
Seat leakage class (as per ANSI/FCI 70.2):
Class III & IV (standard)

Applications
MIL 41000 series heavy duty cage guided control valves are engineered for the most demanding application in process industries, ranging from power generation to integrated petroleum and chemical processing plants and a host of other modern process industries.

Product portfolio. Control valve.

MIL 78000

Overview:
MIL 78000 muti-stage anti-cavitation/low noise control valves fo a perfect severe service solution provider. Handling high pressure fluids without erosion, vibration or noise levels.

Technical Specifications:
ASME 300# to 2500#
DN 1/2" to 6"
Seat leakage class (as per ANSI/FCI 70.2):
Class IV & V (standard), VI (optional)

Applications
MIL 21000 series have envolved as the optimum solution for a wide spectrum of severe service applications in all industry segments. Applications like boiler feed pump min. recirculation, spraycontrol, low load feed water, high pressure hydrocarbon service (including amine service), high pressure injection water, high ammonia letdown, etc.

MIL 29000

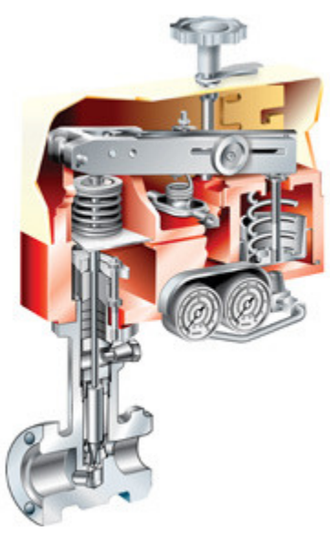

Overview:
Design specifically for microflow applications, MIL 29000 series provides excellent throttling control performance with a wide range of options and capabilities. Rugged valve plug support is provide along the entire stroke length using an integrated plug guide and seat ring. Micropak's simple top entry body construction includes an integrated body and bonnet design, which allows easy access and removal of the quick range trim.

Technical Specifications:
ASME 150# to 1500#
DN 1/2" to 1"
Seat leakage class (as per ANSI/FCI 70.2):
Class IV (standard), V (optional)

Applications
Micropak valves are widely used in all industry segments. With an inherent rangeability of 500:1, Micropak valves provides improved process efficiency through accurate control in any low flow or dosing application where precise control and wide rangeability is essential to maintain the quality of the process or end-product

Product portfolio. Control valve.

MIL 77000

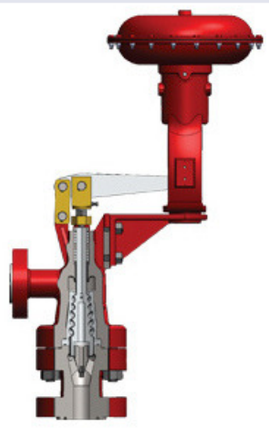

Overview:
MIL 77000 multi-stage labyrinth control valve with multiple pressure letdown stages and expanding downstream area. The unique trim design allow safe operation by directing the flow through a series of expanding stages, providing improved service.

Technical Specifications:
ASME 600# to 2500#
DN 2" to 8"
Seat leakage class (as per ANSI/FCI 70.2):
Class IV (standard), V and VI (optional)

Applications
MIL 77000 series valves are widely employed in the oil&gas sector, both upstream and downstream. The compact design is ideal for high pressure, erosive choke applications in wellheads. In the downstream refining area, during the processes of hydrocraking, hydrotreating, resid-hydrocraking and catalytic dewaxing. are also successfully used for steam/water injection, hot high pressure separator, etc.

MIL 91000

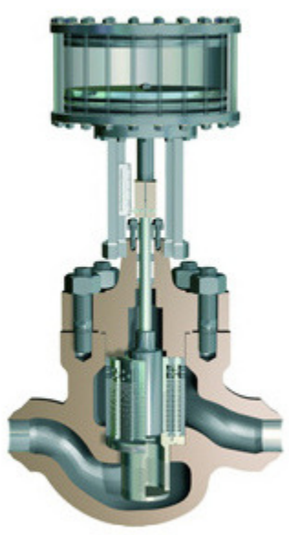

Overview:
MIL 91000 extreme pressure multi-stage and multi-path anti- cavitation control valves, tortuous flow path with high impedance for energy absorption, varying and expanding flow path, pressure recovery factor as high as 0.999, as many as 40 pressure dropping stages, dynamically stable, flow tending to open design, modified equal % characteristics with 100:1 rangeability.

Technical Specifications:
ASME 300# to 4500#
DN 1/2" to 20"
Seat leakage class (as per ANSI/FCI 70.2):
Class V (standard) and VI (optional)

Applications
MIL 91000 series have been designed for applications up to 420 bar pressure drop in 40 pressure/velocity dropping stages. Applications like boiler feed pump min. recirculation, start-up feed water, superheater, reheater, PRDS spray control, high pressure steam vent & condenser dump, primary heat transfer, HP separator letdown, hydrogen, water / steam injecton, HP Ammonia letdown, high pressure CO_2, etc.

Comprehensive solutions. Global reach.

KSB offers a diverse range of products for all core sectors in the process industry. From feed water to chemicals, from petroleum to heavy water, from cryogenic fluids to corrosive fluids and toxic materials, KSB provides products with customized design features and materials to meet the specific requirement of the industry.


MIL 21000
Post Guided

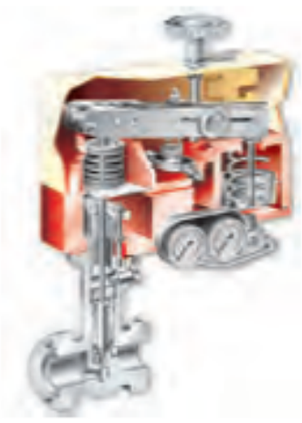
MIL 29000
Microflow


MIL 41000
Cage Guided


MIL 78000
Multistage


MIL 77000
Labyrinth


MIL 91000
Multi-Stage Multi-Path

Product	Description	Standard Size (In Inches)	Ratings (ASME Class)	Seat Leakage (as per FCI 70.2)	
				Standard	Optional
MIL 10000	Double Ported Top & Bottom Guided Control Valves	0.75 - 16	150# - 1500#	II	III / VI
MIL 10R- 21R	Direct Operated Pressure Regultors	1 - 4	150# - 600#	II / IV	
MIL 21000	Single Seated Heavy Top Guided Globe Control Valves	0.5 - 10	150# - 2500#	IV	V / VI
MIL 22000	Bellows Sealed Valves for Critical Service	0.25 - 4	150# - 2500#	< $1x10^{-5}$ mbar lt/sec across seat	
MIL 25000	Self-draining Compact Globe Control Valves	1	150# - 300#	IV	V / VI
MIL 27000	Compact Globe Control Valves	0.5 - 2	150# - 300#	IV / VI	V
MIL 29000	Micropak Micro flow Control Valves	0.5 - 1	150# - 1500#	IV	V
MIL 41000	Single Seated Heavy Duty Cage Guided Globe Control Valves	0.5 - 36	150# - 4500#	III / IV	V
MIL 50000	Cryogenic Valves	0.5 - 4	150# - 2500#	IV	V / VI
MIL 70000	Single Seated Heavy Top Guided Angle Control Valves	0.5 - 10	150# - 2500#	IV	V / VI
MIL 71000	Single Seated Heavy Duty Cage Guided Angle Control Valves	0.5 - 36	150# - 4500#	III / IV	V
MIL 76000	High Pressure Letdown Control Valves	1 - 2	150# - 2500#	IV	V
MIL 77000	Multi-stage Labyrinth Lo-dB Control Valves	2 - 8	600# - 2500#	IV	V
MIL 78000	Multi-stage Anti-cavitation and Low Noise Control Valves	0.5 - 6	300# - 2500#	IV / V	VI
MIL 81000	Three Way Combining and Diverting Control Valves	0.75 - 12	150# - 2500#	IV	VI
MIL 91000	Multi-sage Multi-path Axial Flow Control Valves	0.75 - 20	150# - 4500#	V	VI

Technology that makes its mark

KSB – Bombas e Válvulas, S.A,

Parque Empresarial Albiz – D1 - 2635 – 206 Rio de Mouro,
E-mail geral: ksbportugal@ksb.pt

You can also visit us at: www.ksb.pt