Our technology. Your success.
Pumps ▪ Valves ▪ Service

Amarex KRT –
With Next Generation Impellers

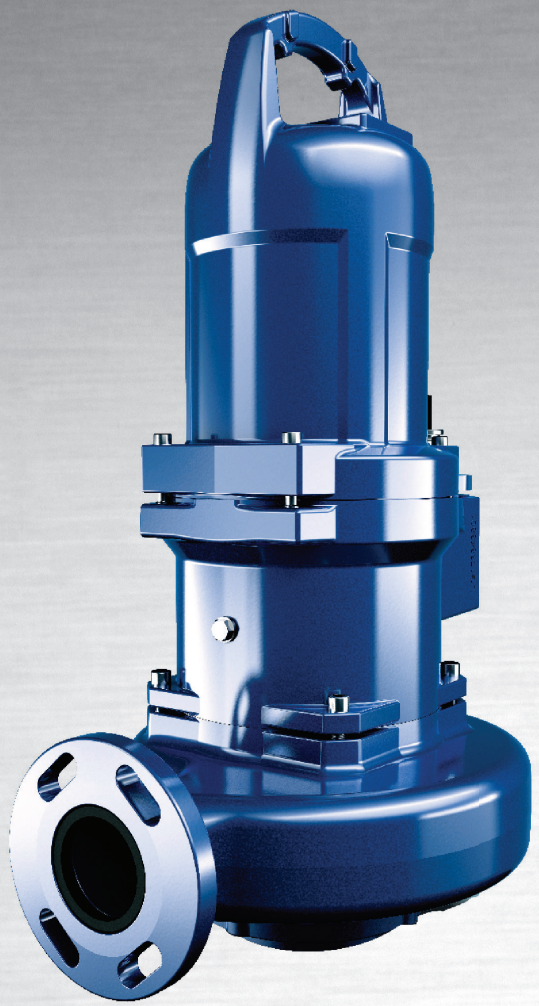

Applications:

- Waste water transport
- Municipal and industrial waste water
- Waste water treatment
- Sludge treatment
- Storm water transport

More information:
www.ksb.us.com

Impeller options

Type F-max

Type E-max

Type K-max

Type D

Amarex KRT – With Next Generation Impellers

1 Reliable operation

- Non-clogging impellers with large free passages, optimized for every type of waste water
- Specially protected cable entry
- Monitoring: Sensors trigger a warning in the event of overheating or ingress of moisture

2 Energy savings

- Optimized hydraulic system yields high efficiency
- Energy-saving motors meeting IE3 requirements*

3 Dependability

Two bi-directional mechanical seals

4 Cost efficiency

- The right material for every fluid. Available in grey cast iron or, optionally, in corrosion-resistant duplex stainless steel or wear-resistant white cast iron for a long service life
- Rolling element bearings are lubricated for life to reduce maintenance
- Optimized spare parts inventories: Standardized components are interchangeable within this type series and with the waste water pumps of the Sewatec type series

Flexibility

Various installation types to suit different building structures

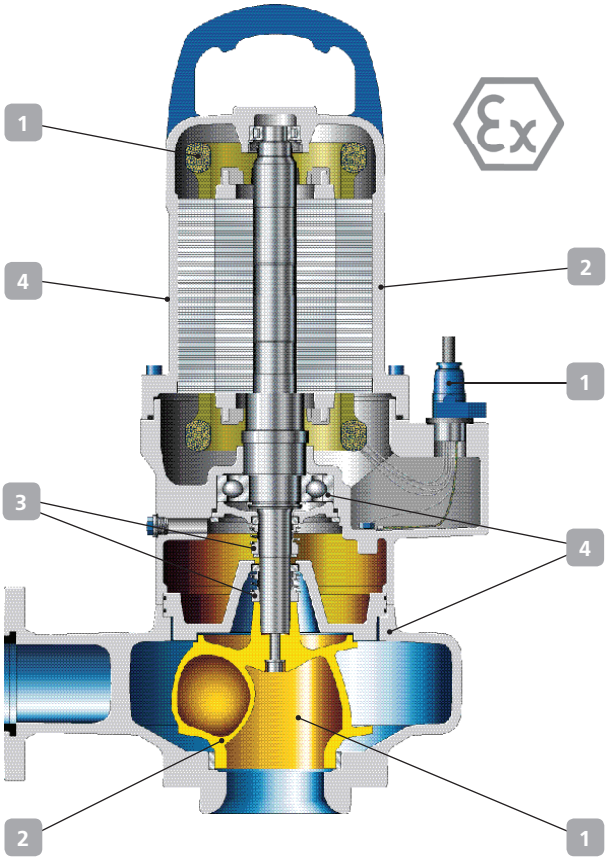

Installation options

Wet installation with guide wire

Wet installation with guide rail(s)

Transportable version

Horizontal dry installation

Vertical dry installation

Technical data

Sizes	DN 40 to 700, 1½ - 28 in.
Capacity	Up to 45,000 gpm
Head	Up to 330 ft.
Fluid temperature	Up to 140 °F
Automation possible	Yes

*IEC 60034-30 standard not binding for submersible motors. Efficiencies calculated/determined according to the measurement method specified in IEC 60034-2. The marking is used for submersible motors that achieve efficiency levels similar to those of standardised motors to the IEC 60034-30 standard.

KSB, Inc.
4415 Sarellen Road
Henrico, VA 23231
ksb.us.com